Cellular Plug-in with Data Plan for the US

COMMUNICATION

For Residential Systems:

CELL-B-R05-US-S-S2

For Commercial Systems:

CELL-B-R05-US-T-S6

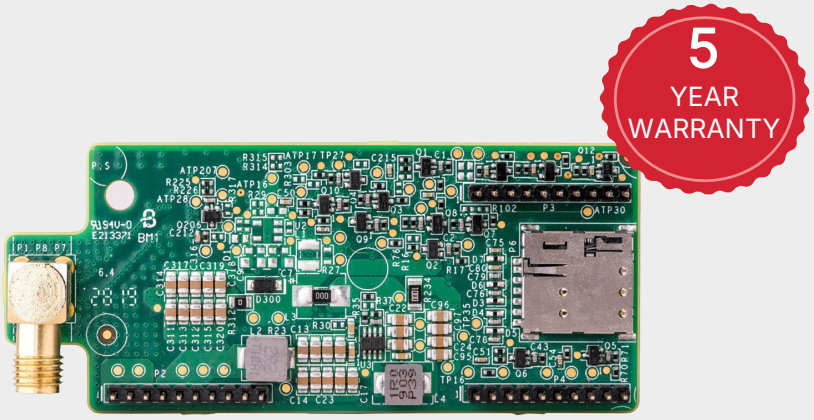

Cellular Internet Connectivity Kit for Commercial and Residential Installations

- Can be used for TerraMax, Commercial Inverters, as well as SolarEdge ONE Manager applications
- One kit is needed per inverter leader/SolarEdge ONE Manager.
- Connect SolarEdge inverters wirelessly to the internet
- No need for internet infrastructure at site
- Installed within the inverter enclosure for outdoor resilience
- Supports high bandwidth monitoring of inverters, optimizers, EV chargers, batteries, meters and weather stations
- Enables remote analysis and troubleshooting
- 5-year-year data plan is included
- Comprehensive coverage in the US

/ Cellular Plug-in with Data Plan for the US

CELL-B-R05-US-S-S2,
CELL-B-R05-US-T-S6

COMPATIBLE INVERTERS (With SolarEdge Go Configuration)	Cell-B-R05-US-S2 SEXXXX-XXXXXBXX4	CELL-B-R05-US-T-S6 SExxK-xxxIxxx4 USE-SIN-USxxIxxSx SE-TRI-USxxIxxS4 SExxxK-USxxxxNAx	UNIT
Monitoring	Continuous connection with 5-minute telemetry from all connected inverters		
Supported Residential Systems (CELL-B-R05-xx-S-S2)	Residential systems: 1 inverter, up to 45 power optimizers, and 1 meter Residential StorEdge systems: 1 inverter connected, up to 30 power optimizers, 2 batteries and 1 meter		
Supported Power of Commercial Systems	All standard commercial power ratings. (for CELL-B-R05-xx-x-S6)		kW AC
Number of Monitored Inverters with a single Cellular Plug-in	Commercial: Up to 32 inverters, limited by the system AC size(2) Residential: 1 inverter		
Data Plan Duration	5 years prepaid plan		
Model Number(3)	CELL-B1 / CELL B3		
RF PERFORMANCE	**OPERATING FREQUENCY**		
LTE Cat M1 FDD	**Band/ Freq (MHz)**	**Modern Transmit / Modern received**	
	2100 (B1)	1920-1980 / 2110-2170	MHz
	1900 (B2)	1850-1910 / 1930-1990	MHz
	1800 (B3)	1710-1785 / 1805-1880	MHz
	1700 (B4)	1710-1755 / 2110-2155	MHz
	850 (B5)	824-849 / 869-894	MHz
	900 (B8)	880-915 / 925-960	MHz
	700 (B12)	699-716 / 729-746	MHz
	700 (B13)	777-787 / 746-756	MHz
	850 (B18)	815-830 / 860-875	MHz
	850 (B19)	830-845 / 875-890	MHz
	800 (B20)	832-862 / 791-821	MHz
	1900 (B25)	1850-1915 / 1930-1995	MHz
	850 (B26)	814-849 / 859-894	MHz
	700 (B28)	703-748 / 758-803	MHz
	1900 (B39)	1880 / 1920	MHz
Bandwidth	1.4, 3, 5(4)		MHz
Maximum Transmit Power	23		dBm
Receiver Input Sensitivity (CE Mode A)	-107		dBm
Modulation	Downlink: QPSK\16QAM\64QAM, Uplink: QPSK\16QAM		
ANTENNA			
Dual Antenna Bands	824-960	1710-2170	MHz
Antenna Type	Outdoor		
Antenna Connector	RP-SMA or N plug(5)		
VSWR	≤4.0		
Gain	2		dBi
Polarization	Vertical		
Material	PC Lexan 503R-WH5151L or WH8G952 Sabic		
Dimensions (Length x Diameter)	7.87 x 0.78 / 200 x 20		in / mm
Antenna Cable length — CELL-B-R05-xx-S-Sx	52 / 130		in / mm
Antenna Cable length — CELL-B-R05-xx-T-Sx(6)	71 / 180		in / mm
STANDARD COMPLIANCE			
EMC and Radio	FCC parts 15, 22, 24 class B; Industry Canada (IC):ICS-003, RSS-102 AS/CA S042.4 Requirements for connection to an airinterface of a Telecommunications Network Part 4: IMT Customer Equipment		
Safety cUL, UL60950	cUL, UL60950		
RoHS	Yes		
INSTALLATION SPECIFICATIONS			
Dimensions (L x W x H)	3.07 x 1.27 x 0.56 / 78.2 x 32.5 x 14.2		in / mm
Operating Temperature	-40 to +85 / -40 to +185		°C / °F
Mounting	Built into the inverter or purchased separately		
Power consumption	0.85 (@23 dBm output power)		W
SIM CARD HOLDER			
Type	Nano Sim		

* Information concerning the Data Plan's terms & conditions is available in the following link: https://www.solaredge.com/sites/default/files/se-communication-plan-terms-and-conditions-eng.pdf

(1) Customer is responsible for verifying that the site location has adequate mobile coverage by the third party service provider prior to any installation by accessing the following link for US: https://www.solaredge.com/us/products/communication/cellular-communication-options#/ select the CAT M1 option.

(2) For larger systems, use multiple cellular plug-ins

(3) Two types of modems can be used interchangeably

(4) Exact value depends on actual operating band

(5) Two types of antennas may be supplied interchangeably

(6) Long antenna cable should be used with Three Phase Synergy Technology Inverter up to 120kW

/ Cellular Plug-in with Data Plan for the US

CELL-B-R05-US-S-S2,
CELL-B-R05-US-T-S6

Commercial Inverters connected without SolarEdge ONE Manager

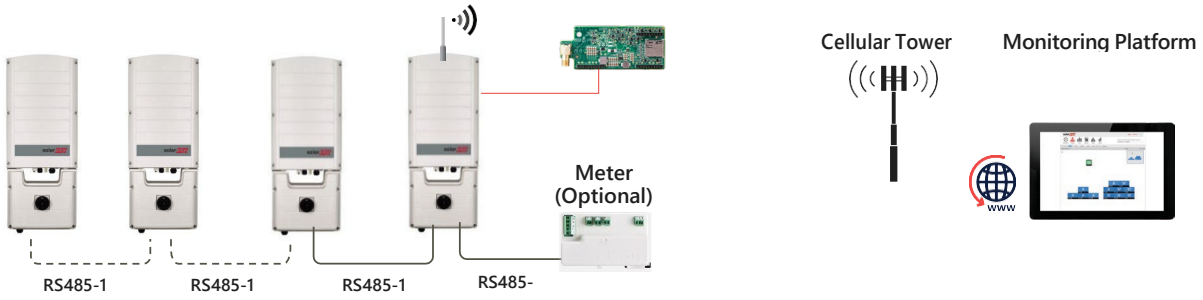

Commercial Inverters/ PV site connected via SolarEdge ONE Manager

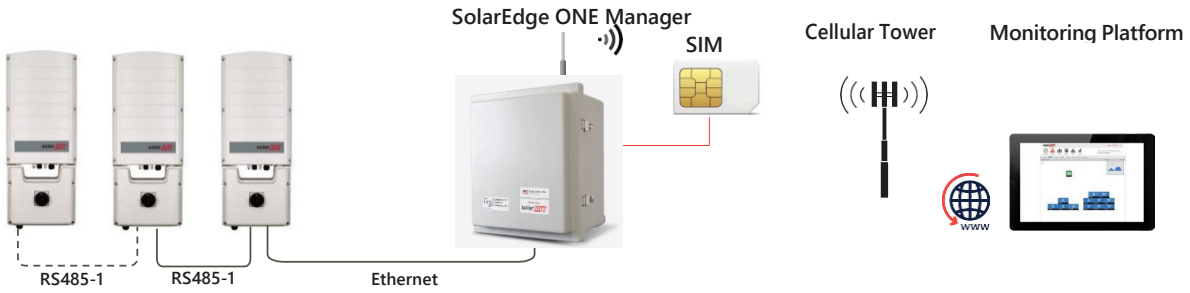

Single or multiple residential Inverters

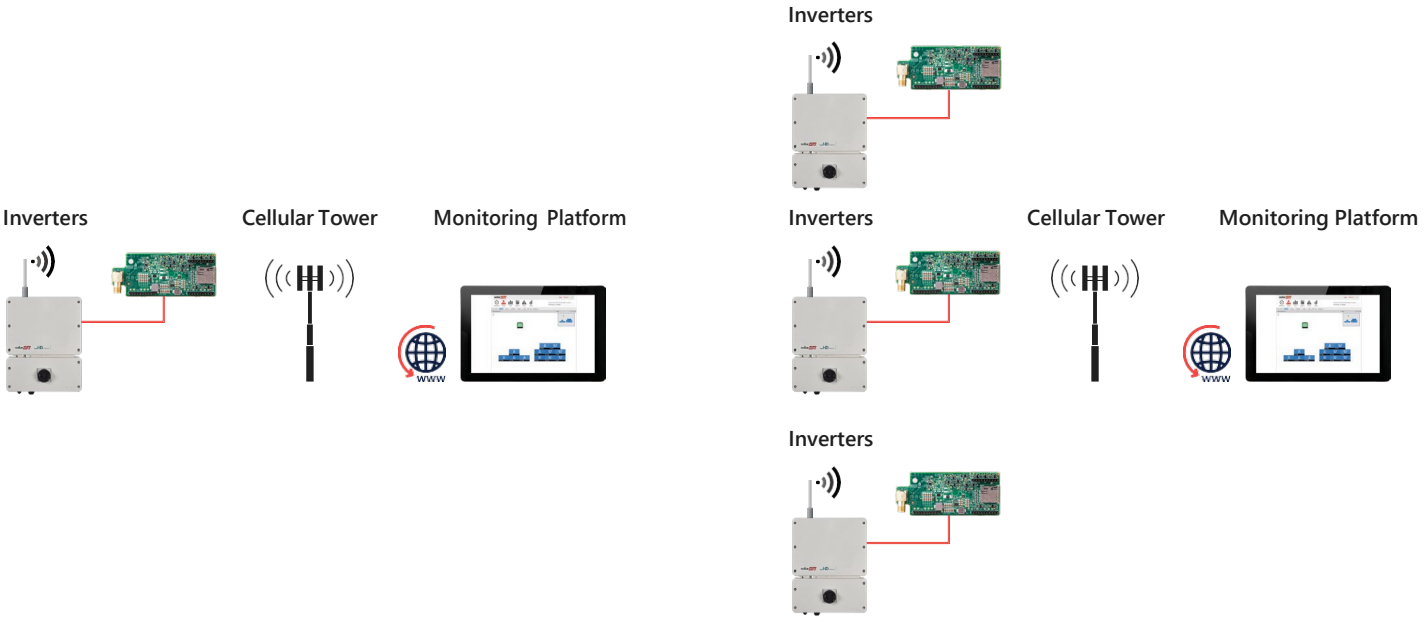

© SolarEdge Technologies, Inc. All rights reserved. SOLAREDGE, the SolarEdge logo, OPTIMIZED BY SOLAREDGE are trademarks or registered trademarks of SolarEdge Technologies, Inc. Allothertrademarks mentioned hereinaretrademarks of theirrespective owners. Date: 02/2026 DS-000056-2.3-NA. Subject to change without notice.

CE RoHS