

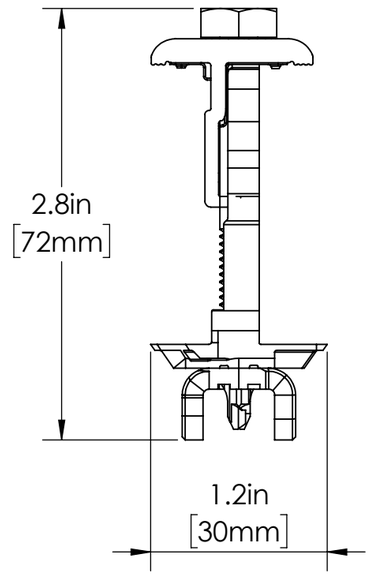

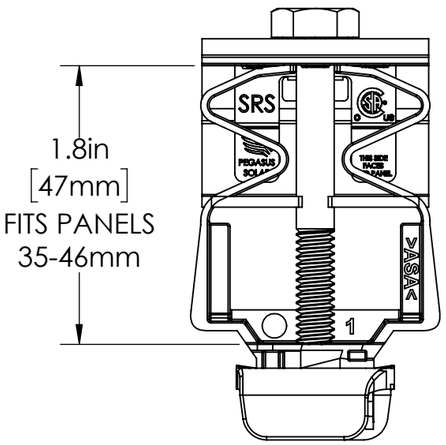

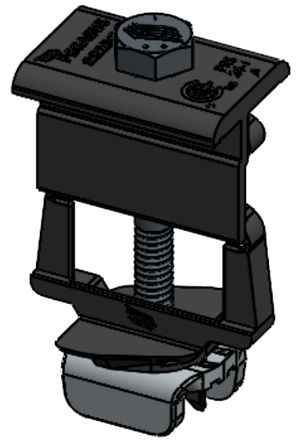

PROPRIETARY AND CONFIDENTIAL
THE INFORMATION CONTAINED IN THIS DRAWING IS THE SOLE PROPERTY OF PEGASUS SOLAR INC. ANY REPRODUCTION IN PART OR AS A WHOLE WITHOUT THE WRITTEN PERMISSION OF PEGASUS SOLAR INC IS PROHIBITED.

COMMENTS:
WEIGHT: 61 GRAMS

UNLESS OTHERWISE SPECIFIED:
DIMENSIONS ARE IN INCHES

INTERPRET DRAWING PER ASME Y14.5-2009

3RD ANGLE PROJECTION

TITLE:
PEGASUS MULTI-CLAMP - MID/END - 35 to 46mm FRAMES - FULL BLACK

PART NUMBER: **PSR-MCB-46**

DRAWN: K. KELLY

CHECKED:

SIZE **B**

REV B

DATE: 20251216

SCALE: 1:1

SHEET 1 OF 1

8 7 6 5 4 3 2 1

D C B A